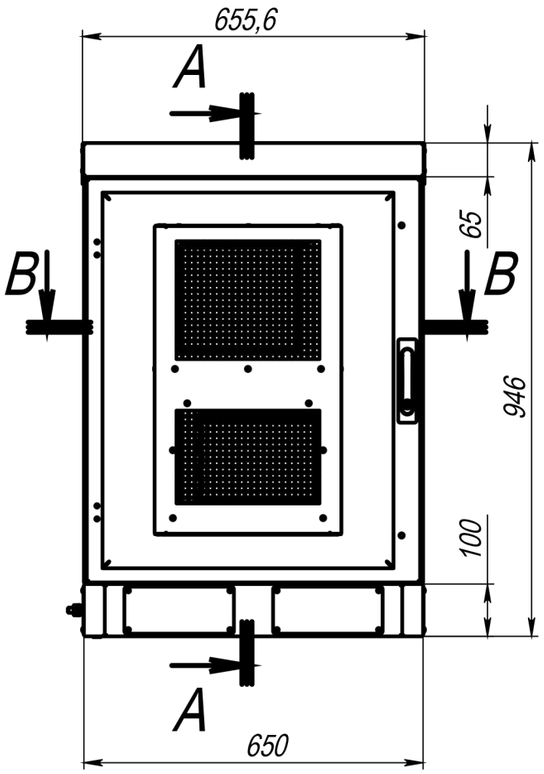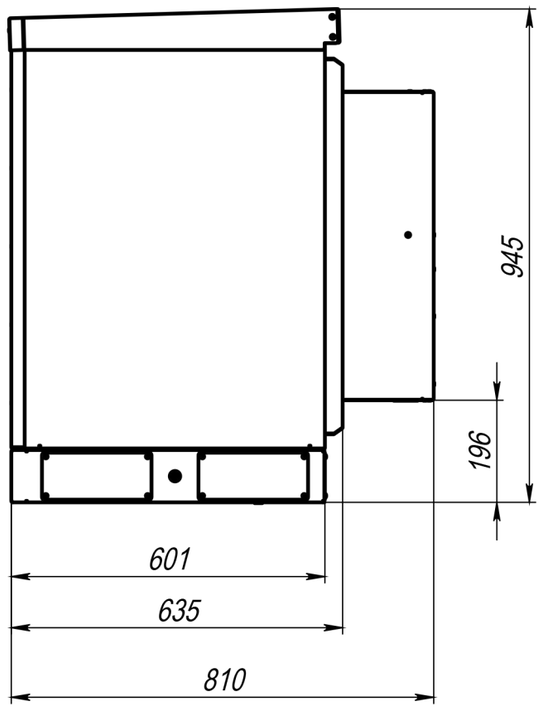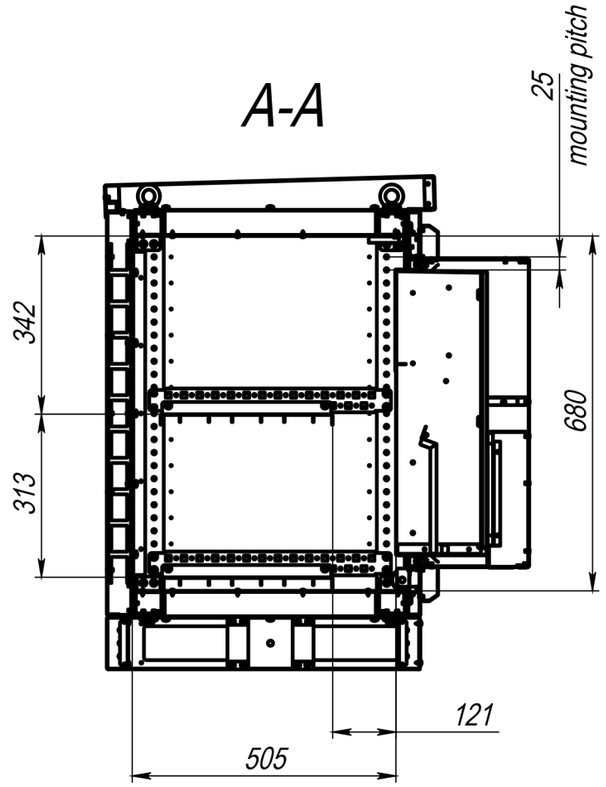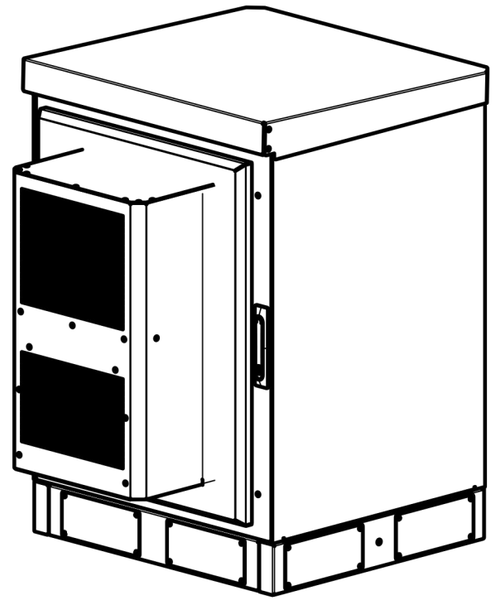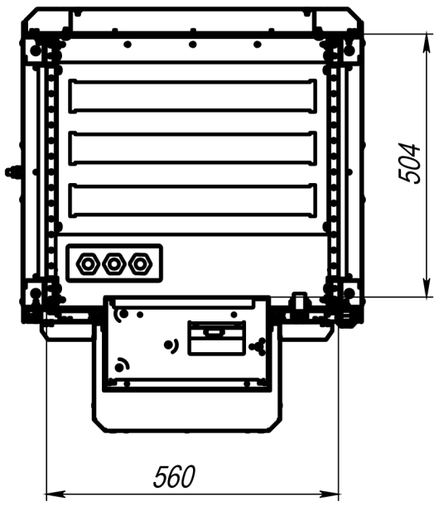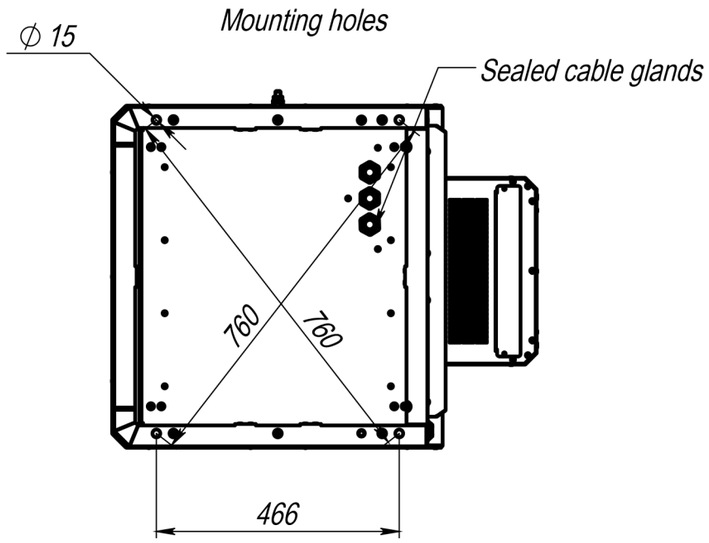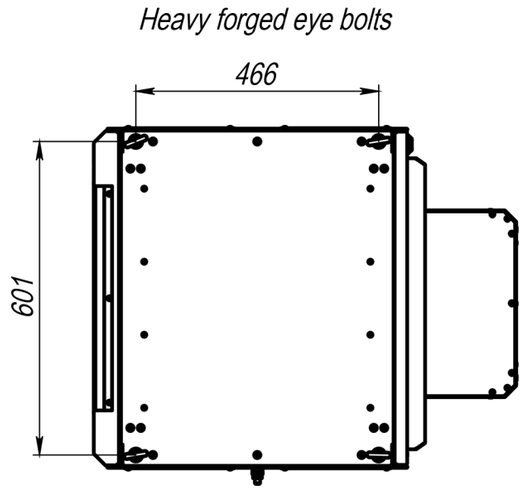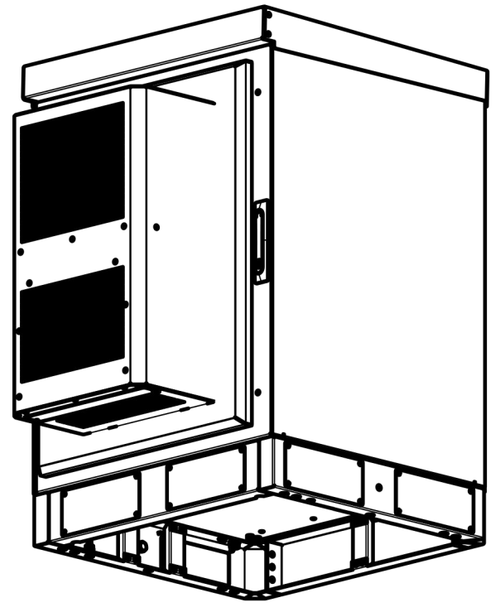Dimensional drawing: Outdoor cabinet B15C